Homepage 3

Description

[vc_row css=â?•.vc_custom_1773052392849{padding: 20px !important;}â?•][vc_column width=â?•1/3â?³ css=â?•.vc_custom_1773052467270{padding: 5px !important;}â?•][/vc_column][vc_column width=â?•1/3â?³ css=â?•.vc_custom_1773052481030{padding: 5px !important;}â?•][/vc_column][vc_column width=â?•1/3â?³ css=â?•.vc_custom_1773052490950{padding: 5px !important;}â?•][/vc_column][/vc_row][vc_row css=â?•.vc_custom_1772256508315{padding: 20px !important;}â?•][vc_column][vc_column_text]

Pharma Basix

default watermark

Design & Manufacturers Of Process Equipments

Pharma Basix is engaged in the design and manufacture of high-performance equipment for the pharmaceutical, chemical, and food processing industries, engineered with a strong emphasis on precision, safety, and GMP compliance. Our comprehensive product range includes Vacuum Tray Dryers, Rotocone Vacuum Dryers, Fluid Bed Dryers, Tray Dryers, Multi Mills, Vibro Sifters, Double Cone Blenders, Octagonal Blenders, Ribbon Blenders and Mass Mixers each developed to optimize production efficiency, deliver uniform processing, and meet stringent quality standards. With a commitment to reliability, consistent operational performance, and regulatory adherence, we provide durable and customized solutions that address the evolving requirements of pharma, chemical, and food manufacturers.[/vc_column_text]

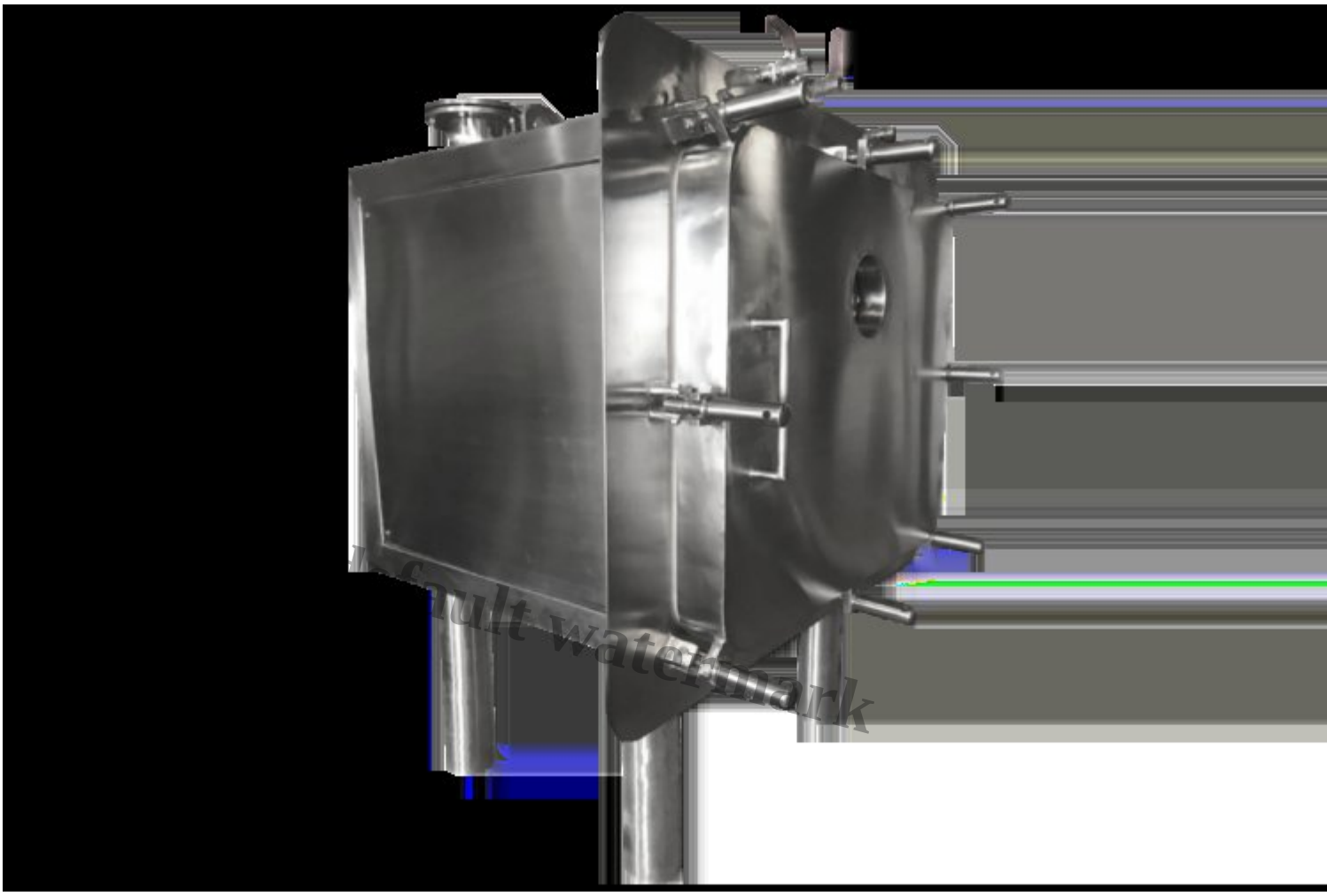

Vacuum Tray Dryer

More

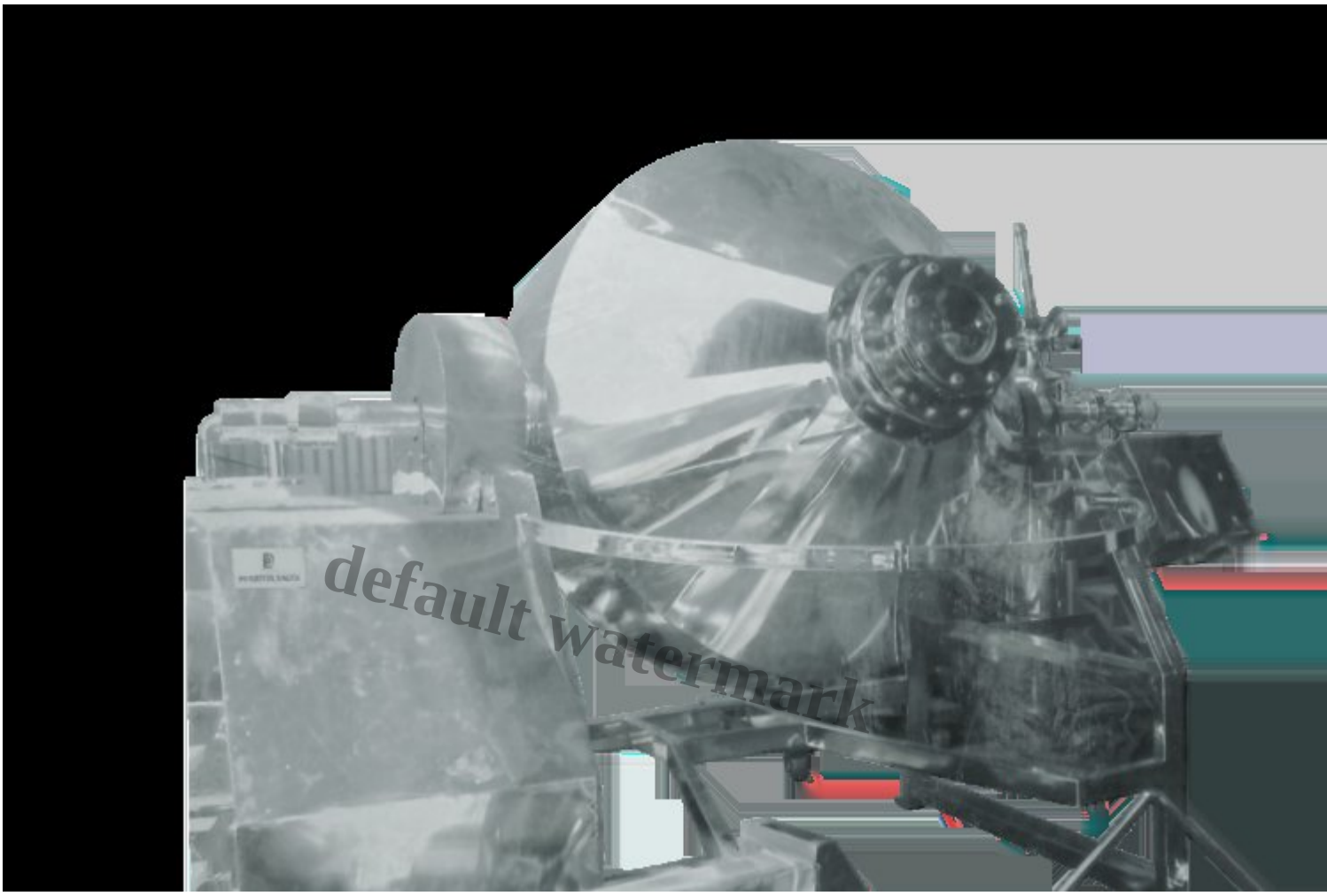

Rotocone Vacuum Dryer

More

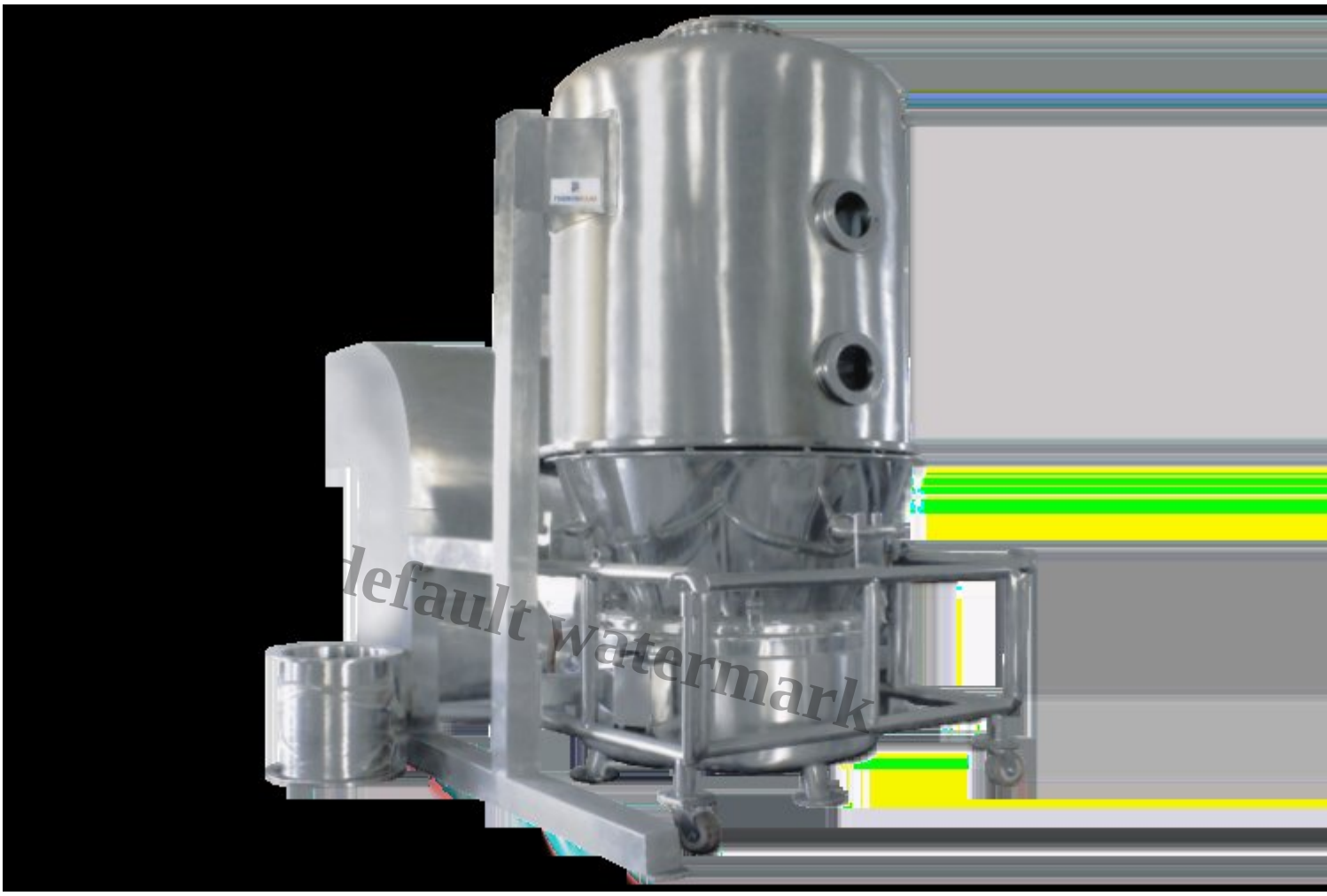

Fluid Bed Dryer

More



Tray Dryer

More

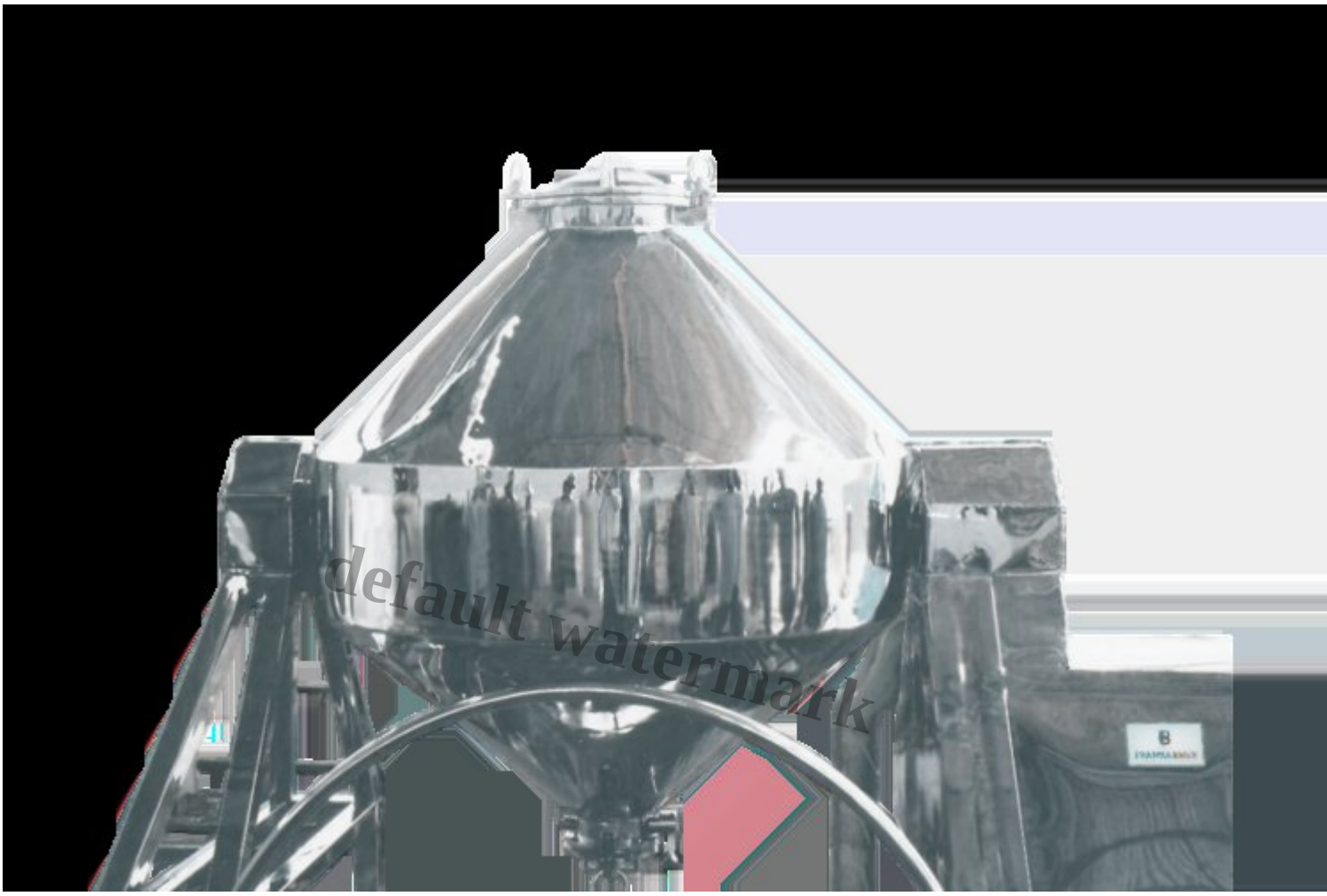

Double Cone Blender

More

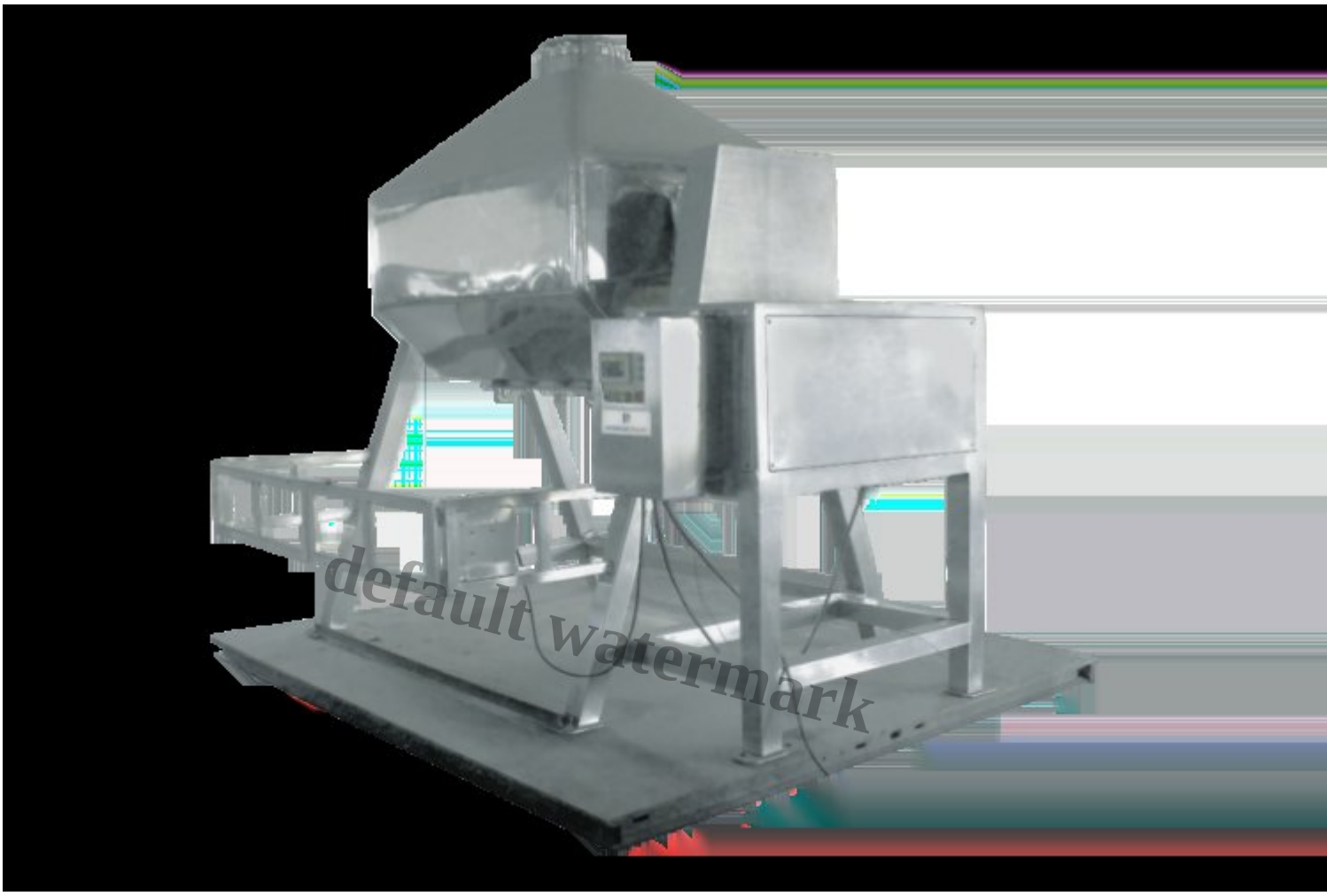

Octagonal Blender

More



Vibro Sifter

More

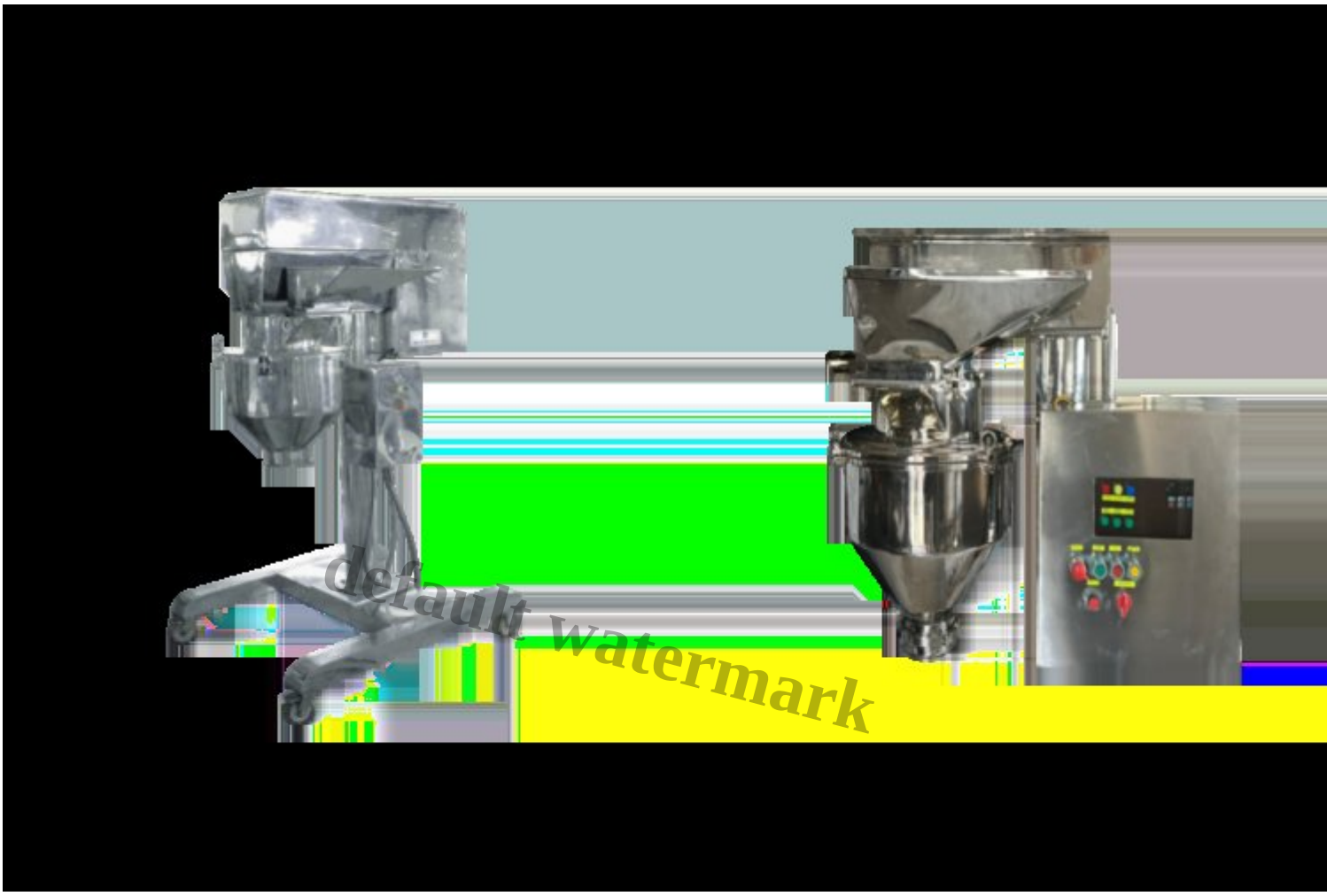

Multi Mill

More

[/vc_column][/vc_row][vc_row cspt-bg-color=â?•whiteâ?• cspt-responsive-css=â?•
19833902|colbreak_no|||||||||colbreak_yes|||||||||colbreak_no|||||||50|||colbreak_no|||||||||â?• css=â?•
.vc_custom_1772273054228{padding-top: 20px !important;padding-right: 20px !important;padding-
bottom: 20px !important;padding-left: 20px !important;}â?•][vc_column width=â?•1/2â?³ css=â?•
.vc_custom_1772446941195{padding-right: 15px !important;}â?•][vc_column_text]

We have successfully delivered precision-engineered equipment solutions tailored to pharma and Chemical production environments.

[/vc_column_text][vc_row_inner][vc_column_inner width=â?•
1/3â?³][/vc_column_inner][vc_column_inner width=â?•1/3â?³][/vc_column_inner][vc_column_inner
width=â?•1/3â?³][/vc_column_inner][/vc_row_inner][/vc_column][vc_column width=â?•
1/2â?³][vc_single_image image=â?•322â?³ img_size=â?•fullâ?•][/vc_column][/vc_row][vc_row cspt-text-
color=â?•whiteâ?• cspt-bg-color=â?•blackishâ?• full_width=â?•stretch_rowâ?• cspt-responsive-css=â?•
33508315|colbreak_no|||||50px|45px|50px|45px|colbreak_no|||||||||colbreak_no|||||||||colbreak_no|||||||||â?
•][vc_column css=â?•.vc_custom_1645849447529{padding-right: 0px !important;padding-left: 0px
!important;}â?•][vc_row_inner content_placement=â?•middleâ?• css=â?•
.vc_custom_1772274127359{padding: 20px !important;}â?•][vc_column_inner width=â?•5/12â?³

offset=â?•vc_col-lg-3 vc_col-md-5â?³][/vc_column_inner][vc_column_inner cspt-zindex=â?•2â?³ cspt-bg-image-position=â?•center-centerâ?• width=â?•6/12â?³][vc_single_image image=â?•225â?³ img_size=â?•fullâ?•][/vc_column_inner][vc_column_inner width=â?•5/12â?³ offset=â?•vc_col-lg-3 vc_col-md-5â?³][/vc_column_inner][/vc_row_inner][/vc_column][/vc_row][vc_row cspt-bg-color=â?• lightâ?• full_width=â?•stretch_row_content_no_spacesâ?• gap=â?•30â?³ css=â?• .vc_custom_1772278472741{padding: 20px !important;}â?• cspt-responsive-css=â?• 58716809|colbreak_no||||||15||15|colbreak_no|||||60||60||colbreak_no|||||||||colbreak_no||||||||â?•][vc_column css=â?•.vc_custom_1648631214443{padding-top: 0px !important;padding-right: 0px !important;padding-bottom: 0px !important;padding-left: 0px !important;}â?•]

divis



default watermark

gland pharma



hetero



laurus

default watermark



msn



mylan

nagarjuna

default watermark

neuland

sai-solutions

sami-labs

default watermark

sarca

vasudha

VASUDHA PHARMA CHEM LIMITED

virchows

default watermark

VIRCHOW LABORATORIES LIMITED

vivimed

Vivimed

biocon



clariant

default watermark



zenfold



novopor

Novopor
advanced science...delivered

deccan

default watermark

deccan
Fine Chemicals (India) Pvt. Ltd.

glochem

GLOCHEM
GLOCHEM INDUSTRIES PVT. LTD.

maithri



credo



sriam



salvo

SALVO INDUSTRIES PVT. LTD.
Formerly Salvo Explosives & Chemicals Pvt. Ltd.

fertis

default watermark

FERTIS

aurobindo

AUROBINDO
Committed to healthier life!

bhel



[/vc_column][/vc_row]
Date Created
April 6, 2022
Author
admin

default watermark